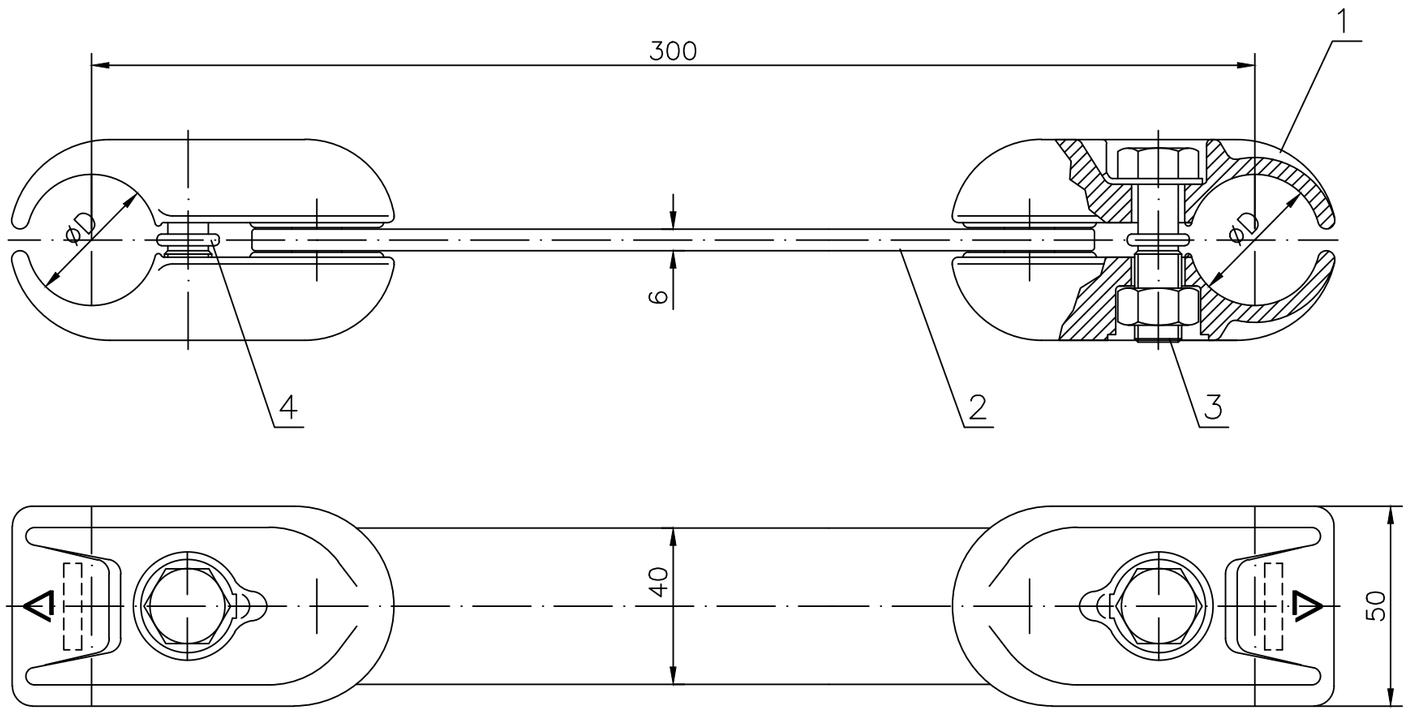

øD = 20.51 – 23.8 mm

Manufacturer's trade mark, catalogue number
and conductor diameter are marked on product.

Note:
al. alloy : acc. to EN (DIN 1725)
steel : acc. to EN 10025

h. d. g. – hot dip galvanized : acc. to EN ISO 1461

Tolerances : ±0.7 mm up to and including 35 mm
±2% over 35 mm

Item	Description	Pcs.	Catalogue no.	Material :	Note
4	O – ring	2		rubber	
3	Bolt M10 (compl.)	2		d.f.s./steel/stain.steel	h.d.g./–
2	Support	1		steel	h. d. g.
1	Clamp body (compl.)	2		al. alloy	

Mass : 1.25 kg	Date : 17.08.2009	Name	Signature
	Design by :	R. Franic	
	Checked by :	R. Franic	
	Approved by:	M. Jukic	

Substitute for :

Catalogue number :
38.52.30.30F

DALEKOVOD
ZAGREB
CROATIA

Title : RIGIDE SPACER
– for two conductors –

Revision

EMPOWER

elering
ÕHENDAME ENERGIAD AS

Projekteeris/Kuupäev
H. Vihman 27.11.2010

Kontrolli/kuupäev
J. Karin

Kooskõlastas

Joonestas

Leht

Lehti

Staatus
Teostusjoonis

Muudatus
TJ

Joonise number
KPL1010-K2.2-06.7.3

Formaat
A3

Objekt
330/110kV TARTU-SINDI ÕHULIINI EHITUS
II ehitusetapp, Oiu - Viljandi

Joonise nimi
Liinitarvikud
110 kV juhtmete distantshoidik

Mõõtkava